"Renovation of Bartang village Oorani"

- DESIGN&COST ESTIMATE-

Submitted to

Department for Drinking Water Supply
Government of India

Anna University

February 2009

Centre for Environmental Studies
(CES)

Dirk Walther
CIM-Expert
Centre for Environmental Studies
Anna University, Chennai-25
Tel.: +91-44-2235 3083
Email: dirkwalther2006@gmail.com

Introduction

The Department of Drinking Water Supply is undergoing a paradigm shift in its focus from mere coverage of habitations to universal access to rural people with sustained and safe drinking water supply. In this regard a national delegation comprising experts from various organizations joined to develop as statewise Strategy Paper for Andaman&Nicobar rural drinking water supply.

The objectives were defined as:

Top 1- To enquire about current practices of overall water management
Top 2- Identification of specific issues (problems) pertaining to rural drinking water supply
Top 3- Suggest methodologies for incorporating environmental friendly and sustainable solutions to be adopted by the state
Top 4- Potential and conflicts arising from IWRM principles

Based on the findings in the fields recommendations were given to further improve on the water supply system.

Current centralized water supply scheme at Bartang island

Based on the information of local engineers it is understood that Bartang runs a centralized water supply system using spring water as a primary source. These systems are designed in the following manner as shown in the flow diagram in Fig. 6-2:

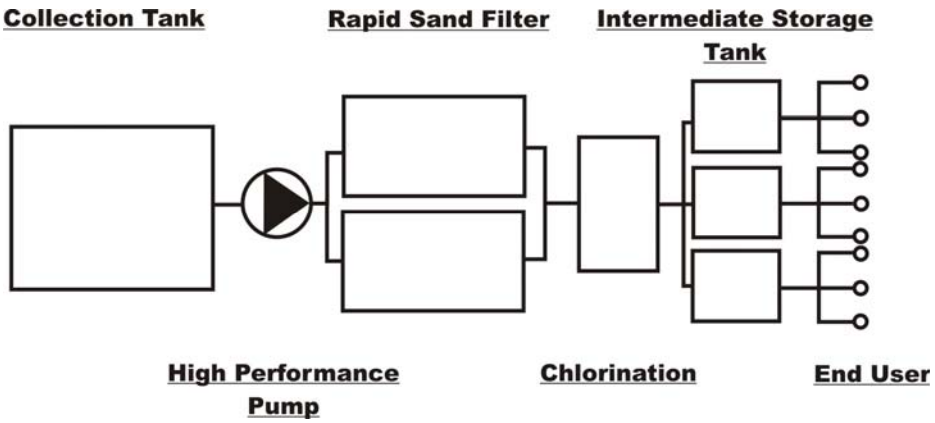

Figure 0-1: Conceptional flow diagram of the water supply scheme at Bartang (South Andaman).

The technical set-up of this existing system found high appreciation among the experts. However following draw-backs could be observed:

- Supply is not continuous but alternates on daily basis
- The discharge of the springs decreases significantly during pre-monsoon season and the supply cannot be maintained

- Source is far from the end users (16 km)
- No alternate sources are provided for the end user in the case that the centralized system fails or undergoes maintenance
- The water production cost was figured out to be extremely high

Design of retention and storage facilities called Ooranies

The use of retention and storage facilities has been identified by the expert committee as viable option for enhancing rural water supply as supplement for existing centralized supply schemes. This source provides a huge potential for future implementation in a wider scale. Sharp carved valleys and nullahs as well as less impermeable soils are the ideal conditions to provide small decentralized storage facilities, which additionally function as erosion protection as well as ground water recharge structures.

Two villages were identified on Bartang island, where the centralized water supply was causing problems and villagers used to collect water from a simple dug-hole, which is not fit for drinking water supply. In one of the two villages a storage tank has been identified, which provides an ideal facility to be developed as an Oorani drinking water supply pond.

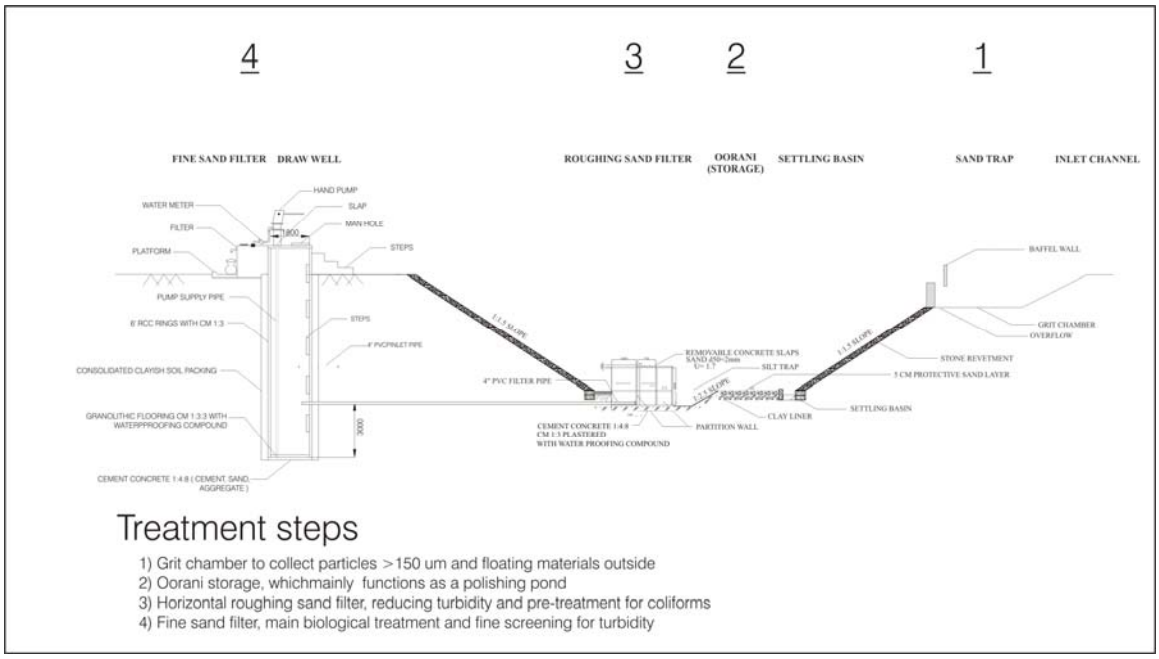

Figure 1: Flow design of an Oorani showing various treatment features

The following pages will provide the basic design features for an Oorani at Bartang village, based on the mission findings. A detailed cost estimates is attached, however the cost estimations bases eon 2008 rates and may differ on Andaman&Nicobar islands. The local engineers are requested to verify the rates if required.

Fact-Sheet for Bartang village Oorani

General information

Name of the Oorani	: -
Panchayat	: Bartang
Block	: -
District	: South Andaman
Nº of people served	: 100
Volume [m^3]	: 5,802
Top surface [m^2]	: 1,735
Bottom surface [m^2]	: 707
Effective Depth[1] [m]	: 5.0
Catchment attached	: X yes □ no
Catchment size [km^2]	: -

Technical Features

- X Grit Chamber
- X Site revetment
- X Clay Liner
- X Shoot + Settling Basin
- □ Vertical Roughing Filter
- X Horizontal Roughing Filter
- □ Upflow Fine Sand Filter
- X Gravimetric Fine Sand Filter
- X Fencing
- X Water meter
- X Monitoring station

Nº of handpumps 2

Photos

Foto 1&2: Existing water retention structure at Bartang island, which can be developed as Oorani. Right side shows the current unhygienic condition of water collected from a dug-hole

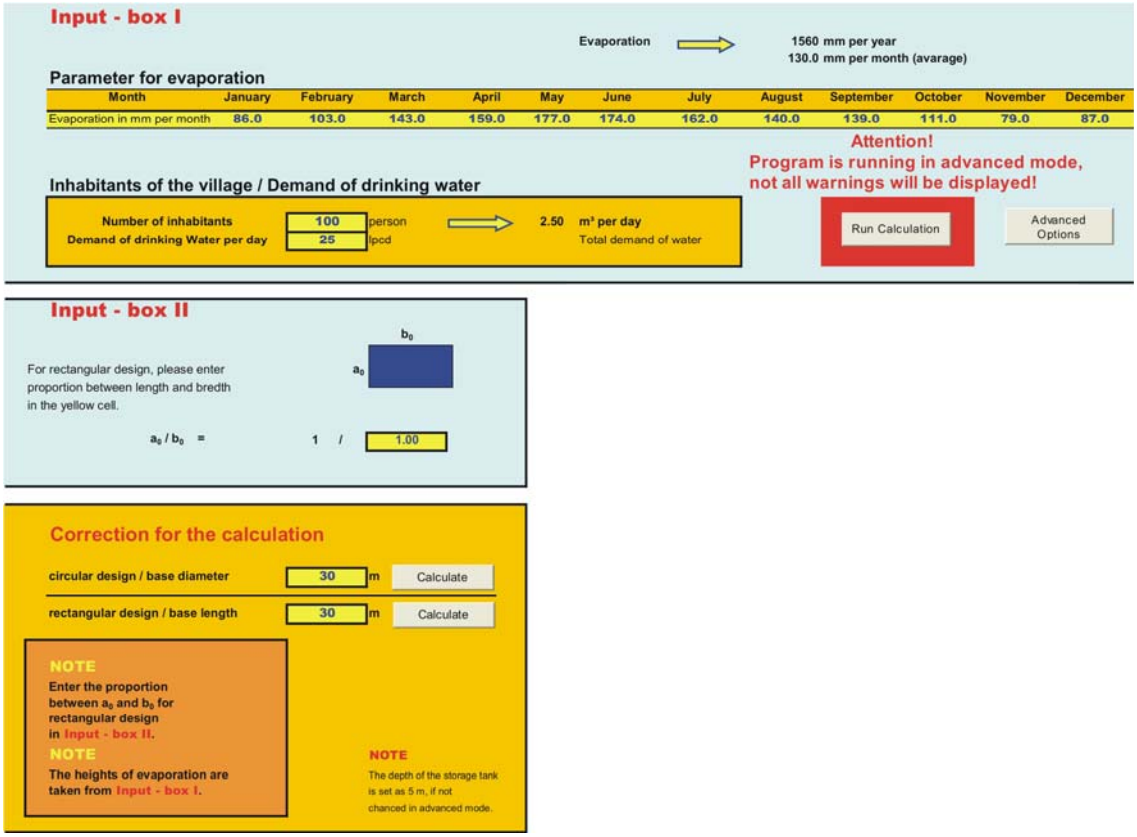
Input - box I
Evaporation
1560 mm per year
130.0 mm per month (avarage)
Parameter for evaporation
Month January February March April May June July August September October November December
Evaporation in mm per month 86.0 103.0 143.0 159.0 177.0 174.0 162.0 140.0 139.0 111.0 79.0 87.0
Attention!
Program is running in advanced mode,
not all warnings will be displayed!
Inhabitants of the village / Demand of drinking water
Number of inhabitants 100 person
Demand of drinking Water per day 25 lpcd
2.50 m³ per day
Total demand of water
Run Calculation
Advanced Options
Input - box II
For rectangular design, please enter proportion between length and bredth in the yellow cell.
a0 / b0 = 1 / 1.00
Correction for the calculation
circular design / base diameter 30 m Calculate
rectangular design / base length 30 m Calculate
NOTE
Enter the proportion between a0 and b0 for rectangular design in Input - box II.
NOTE
The heights of evaporation are taken from Input - box I.
NOTE
The depth of the storage tank is set as 5 m, if not chanced in advanced mode.

Table 1: Results from the calculation.

Parameter	unit	circular	rectangular	Diff (Value)	Diff (%)	circular (100%)	rectangular in %
a_0 / d_0	m	30	30	0	0	100	100
a_2 / d_2	m	47	47	0	0	100	100
Volume ot the storage tank	m^3	5802	7388	-1585	-27	100	127
Area of Surface	m^2	1735	2209	-474	-27	100	127
Area of Bottom	m^2	707	900	-193	-27	100	127
Circumference of the storage tank	m	148	188	-40	-27	100	127
Area of Revetments and Berm	m^2	1209	1540	-330	-27	100	127
Volume of Evaporation	m^3 per year	1788	2368	-580	-32	100	132
Volume of Recharge	m^3 per year	2229	2838	-609	-27	100	127
Total water losses	m^3 per year	4017	5206	-1189	-30	100	130

Total demand of drinking water: **2.50** **m^3 per day**

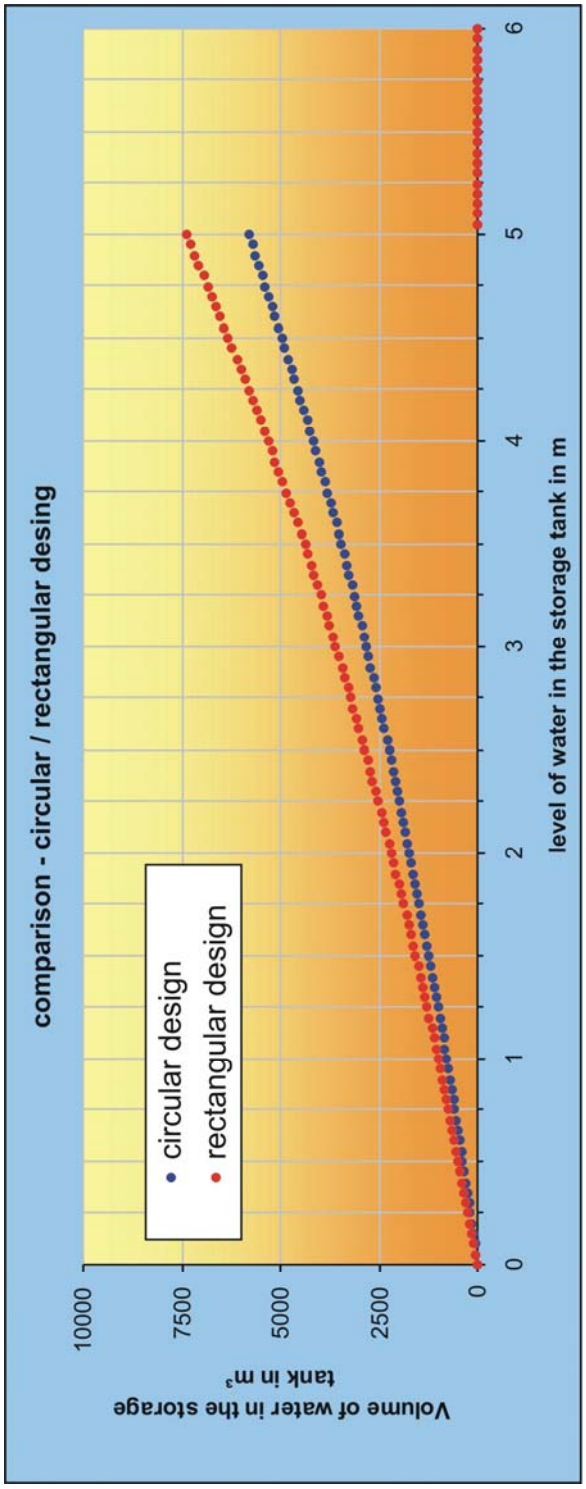
comparison - circular / rectangular desing
circular design
rectangular design
Volume of water in the storage tank in m³
level of water in the storage tank in m
0
2500
5000
7500
10000
0
1
2
3
4
5
6

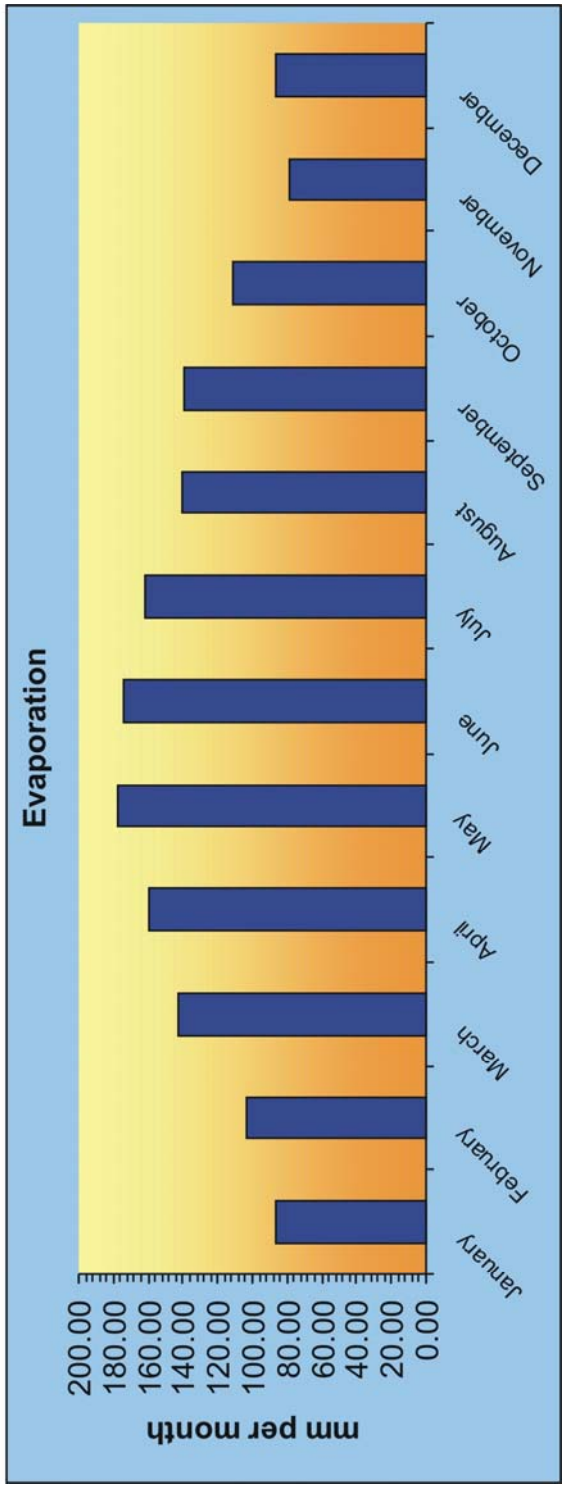
Evaporation
mm per month
0.00
20.00
40.00
60.00
80.00
100.00
120.00
140.00
160.00
180.00
200.00
January
February
March
April
May
June
July
August
September
October
November
December

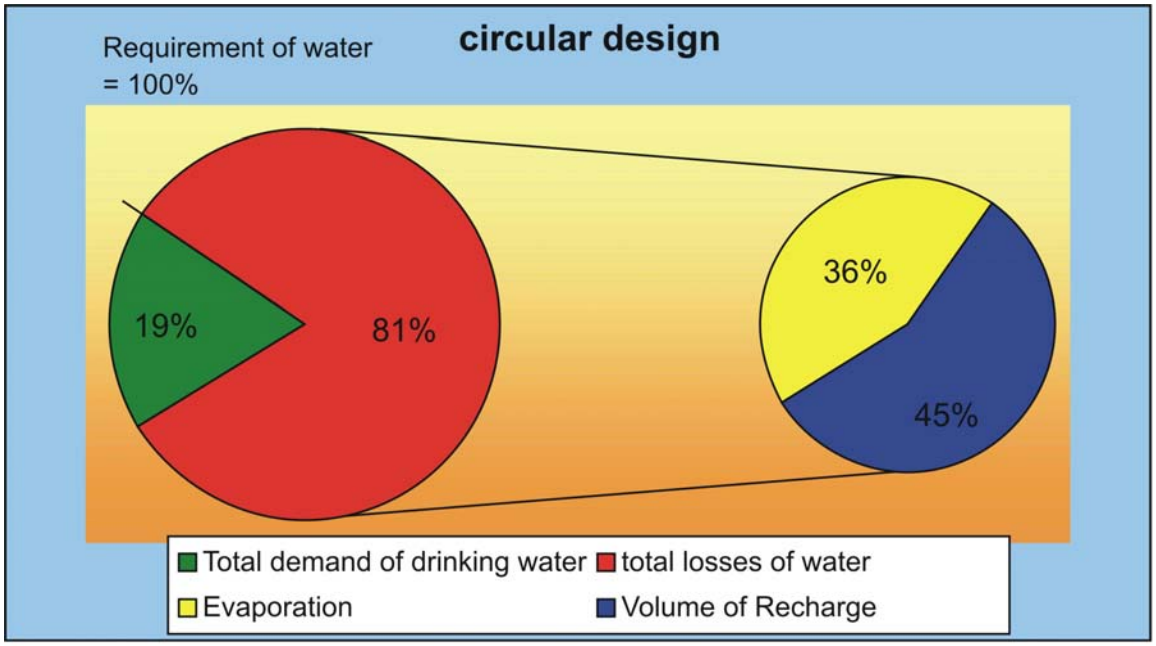
Requirement of water
= 100%
circular design
19%
81%
36%
45%
Total demand of drinking water
total losses of water
Evaporation
Volume of Recharge

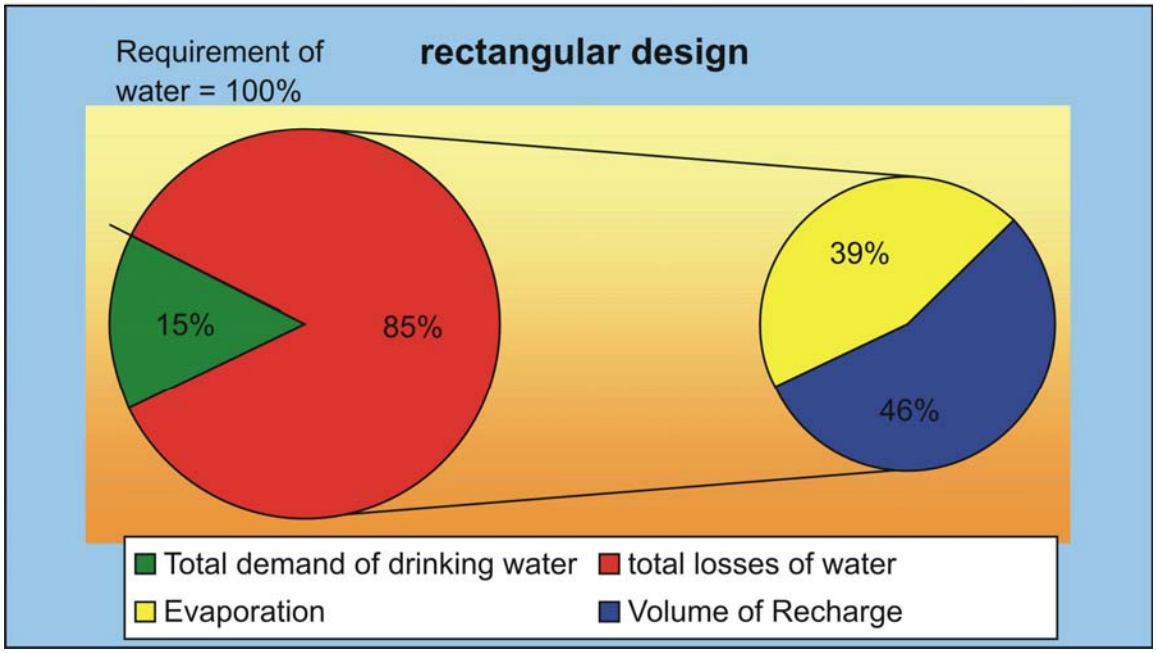
Requirement of
water = 100%
rectangular design
15%
85%
39%
46%
Total demand of drinking water
total losses of water
Evaporation
Volume of Recharge

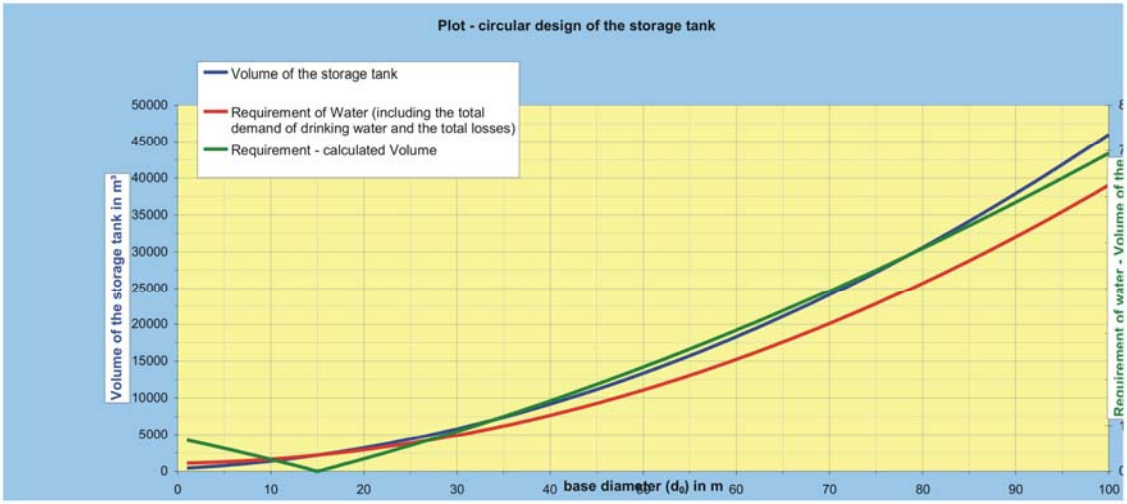
Plot - circular design of the storage tank
Volume of the storage tank
Requirement of Water (including the total demand of drinking water and the total losses)
Requirement - calculated Volume
Volume of the storage tank in m³
base diameter (d0) in m

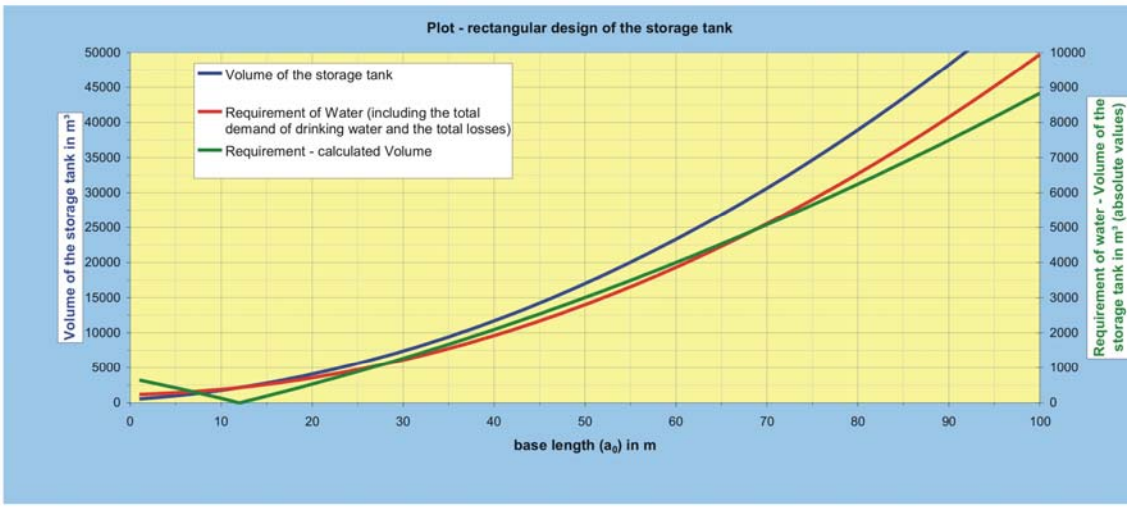
Plot - rectangular design of the storage tank
Volume of the storage tank
Requirement of Water (including the total demand of drinking water and the total losses)
Requirement - calculated Volume
Volume of the storage tank in m³
Requirement of water - Volume of the storage tank in m³ (absolute values)
base length (a0) in m

Design for a circular storage tank

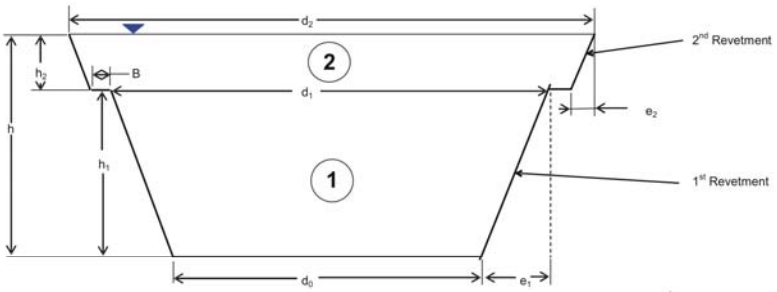

length / m	value
d_0	30.0
d_1	40.5
d_2	47.0
h	5.0
h_1	3.5
h_2	1.5
e_1	5.3
e_2	2.3
B	1.0

Wall around the storage tank

required length of the wall

150 m

Obtained data is automatically minused the length of the gate. The length of the gate is 2 m.

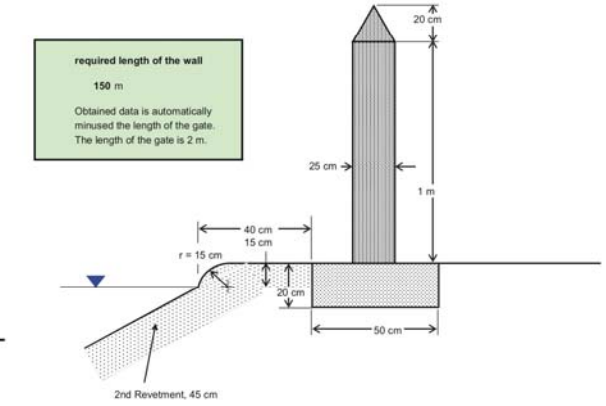

further details

V_1	3441
V_2	2361
V_Oorani	5802
Bottom area	707
Surface area (max.)	1735
Area of 1st Revetment	699
Area of 2nd Revetment	380
Area of Berm	130
SUM	1209

Design for a rectangular storage tank

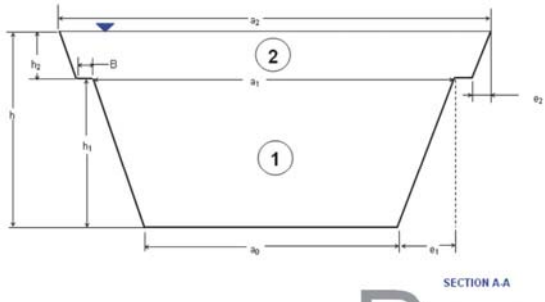

SECTION A-A

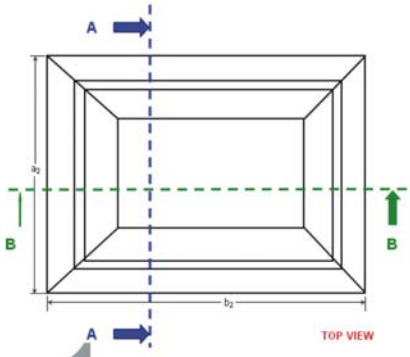

TOP VIEW

Page 1

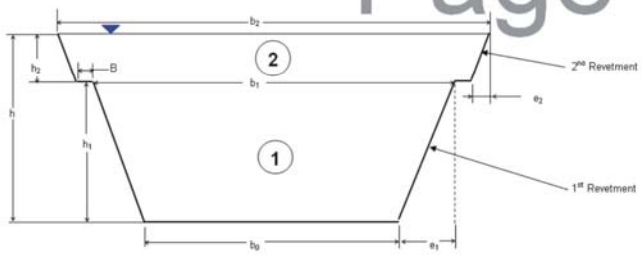

SECTION A-B

SECTION A-A		SECTION B-B	
length / m	value	length / m	value
a_0	30.0	b_0	30.0
a_1	40.5	b_1	40.5
a_2	47.0	b_2	47.0
h	5.0	h	5.0
h_1	3.5	h_1	3.5
h_2	1.5	h_2	1.5
e_1	5.3	e_1	5.3
e_2	2.3	e_2	2.3
B	1.0	B	1.0

Wall around the storage tank

required length of the wall

191 m

Obtained data is automatically minused the length of the gate. The length of the gate is 2 m.

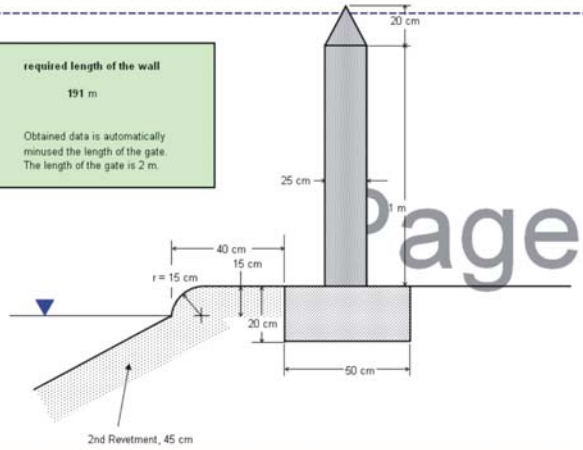

Page 2

further details

V_1	4381	m³
V_2	3006	m³
Veorani	7388	m³
Bottom area	900	m²
Surface area (max.)	2209	m²
Area of 1st Revetmer	890	m²
Area of 2nd Revetme	484	m²
Area of Berm	166	m²
SUM	1540	m²

Proportions

a_0 / b_0	:	1 / 1.00
a_1 / b_1	:	1 / 1.00
a_2 / b_2	:	1 / 1.00

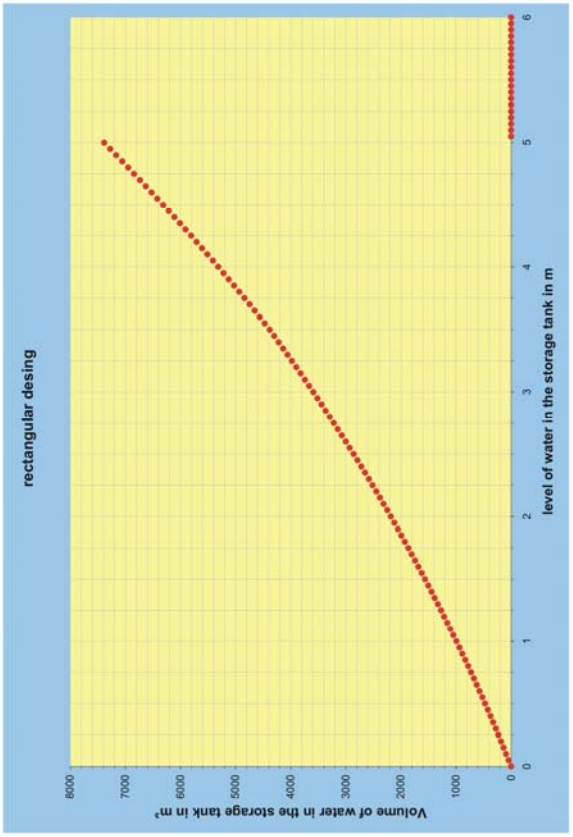
rectangular desing
Volume of water in the storage tank in m³
level of water in the storage tank in m
0
1000
2000
3000
4000
5000
6000
7000
8000
0
1
2
3
4
5
6

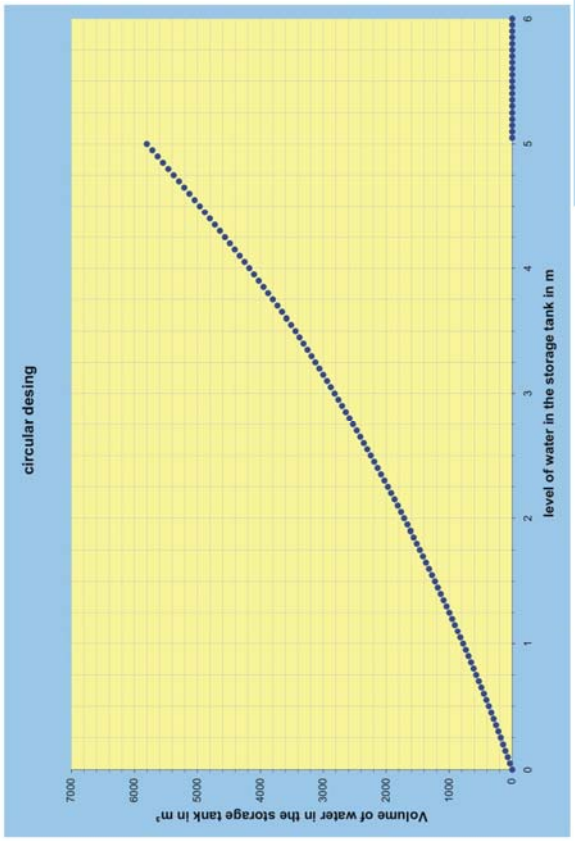
circular desing
Volume of water in the storage tank in m³
level of water in the storage tank in m
0
1000
2000
3000
4000
5000
6000
7000
0
1
2
3
4
5
6

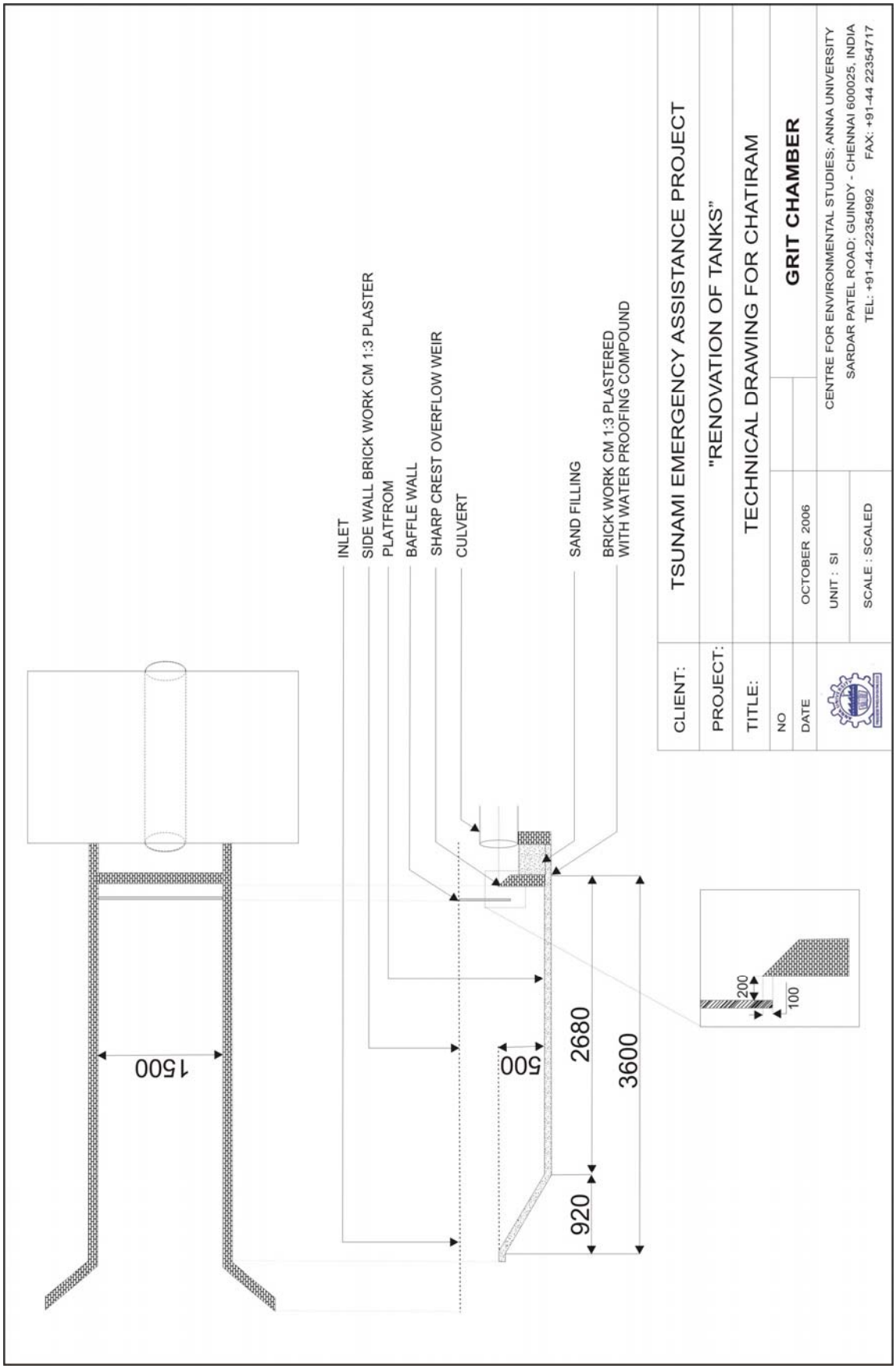
INLET
SIDE WALL BRICK WORK CM 1:3 PLASTER
PLATFROM
BAFFLE WALL
SHARP CREST OVERFLOW WEIR
CULVERT
SAND FILLING
BRICK WORK CM 1:3 PLASTERED
WITH WATER PROOFING COMPOUND
1500
500
2680
3600
920
200
100
CLIENT:
TSUNAMI EMERGENCY ASSISTANCE PROJECT
PROJECT:
"RENOVATION OF TANKS"
TITLE:
TECHNICAL DRAWING FOR CHATIRAM
GRIT CHAMBER
NO
DATE
OCTOBER 2006
UNIT : SI
SCALE : SCALED
CENTRE FOR ENVIRONMENTAL STUDIES; ANNA UNIVERSITY
SARDAR PATEL ROAD; GUINDY - CHENNAI 600025, INDIA
TEL: +91-44-22354992 FAX: +91-44 22354717

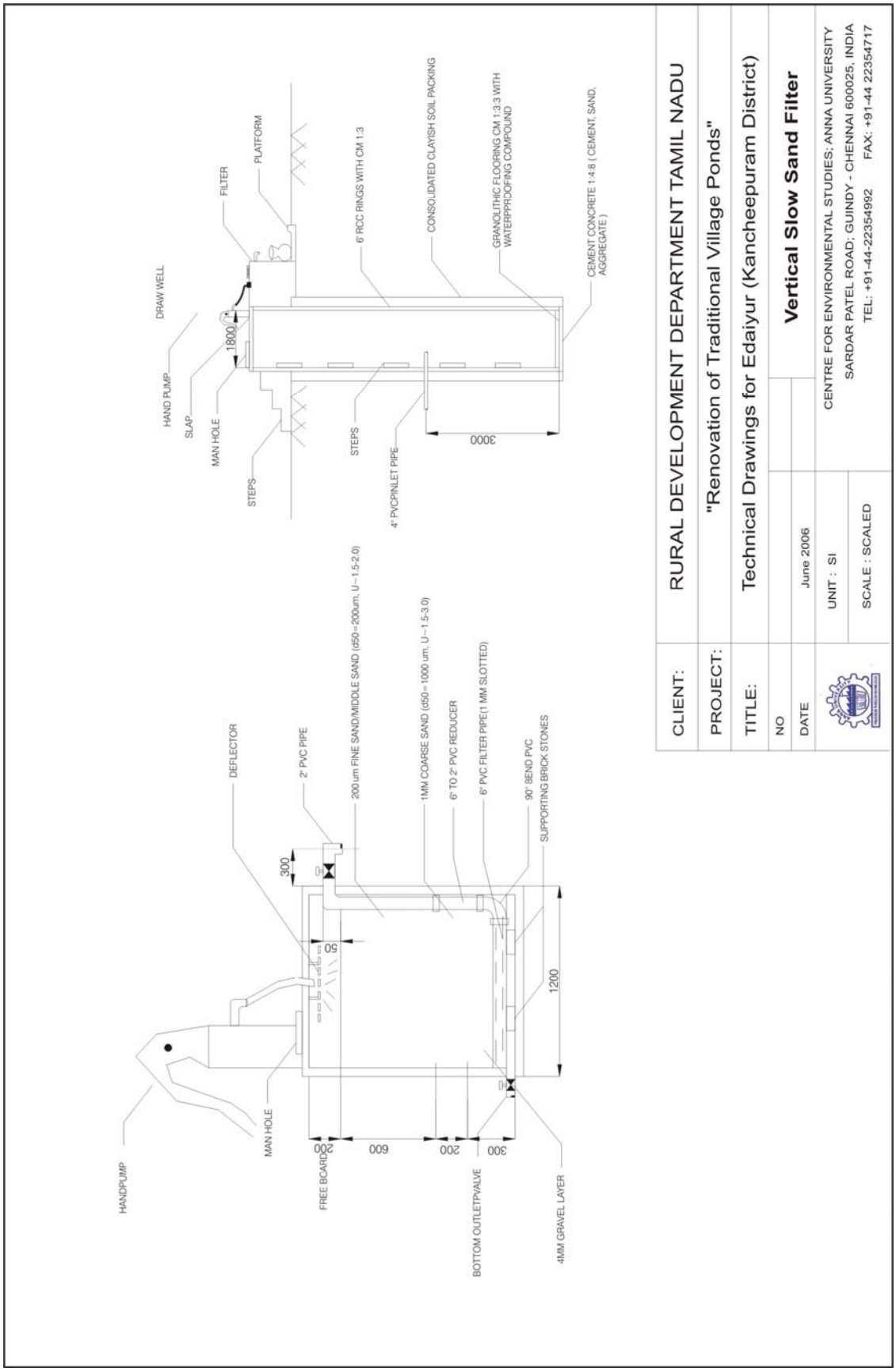
DRAW WELL
HAND PUMP
SLAP
MAN HOLE
1800
FILTER
PLATFORM
STEPS
6' RCC RIMGS WITH CM 1:3
CONSOLIDATED CLAYISH SOIL PACKING
GRANOLITHIC FLOORING CM 1:3:3 WITH WATERPPROOFING COMPOUND
CEMENT CONCRETE 1:4:8 (CEMENT, SAND, AGGREGATE)
STEPS
4' PVCPINLET PIPE
3000
DEFLECTOR
2' PVC PIPE
300
200 um FINE SAND,MIDDLE SAND (d50=200um, U=1.5-2.0)
1MM COARSE SAND (d50= 1000 um, U=1.5-3.0)
6' TO 2' PVC REDUCER
6' PVC FILTER PIPE(1 MM SLOTTED)
90' BEND PVC
SUPPORTING BRICK STONES
50
1200
HANDPUMP
MAN HOLE
FREE BOARD
200
600
200
300
BOTTOM OUTLETPVALVE
4MM GRAVEL LAYER
CLIENT: RURAL DEVELOPMENT DEPARTMENT TAMIL NADU
PROJECT: "Renovation of Traditional Village Ponds"
TITLE: Technical Drawings for Edaiyur (Kancheepuram District)
NO
DATE June 2006
Vertical Slow Sand Filter
UNIT : SI
SCALE : SCALED
CENTRE FOR ENVIRONMENTAL STUDIES; ANNA UNIVERSITY
SARDAR PATEL ROAD; GUINDY - CHENNAI 600025, INDIA
TEL: +91-44-22354992 FAX: +91-44 22354717

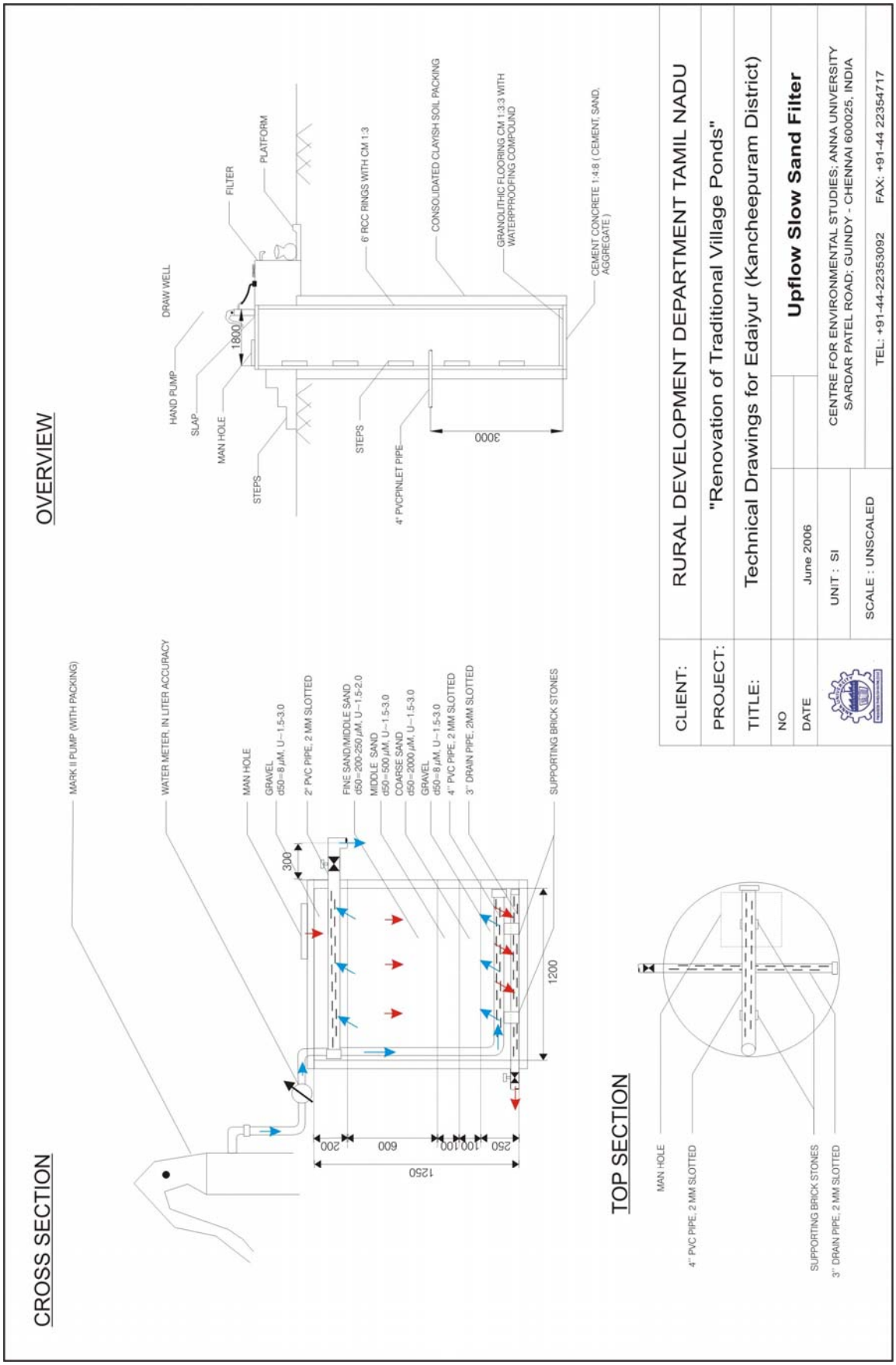
OVERVIEW
DRAW WELL
HAND PUMP
SLAP
MAN HOLE
1800
FILTER
PLATFORM
STEPS
6' RCC RINGS WITH CM 1:3
STEPS
4" PVCPINLET PIPE
CONSOLIDATED CLAYISH SOIL PACKING
GRANOLITHIC FLOORING CM 1:3:3 WITH WATERPPROOFING COMPOUND
CEMENT CONCRETE 1:4:8 (CEMENT, SAND, AGGREGATE)
3000
CROSS SECTION
MARK II PUMP (WITH PACKING)
WATER METER, IN LITER ACCURACY
MAN HOLE
GRAVEL d50=8 µM, U=1.5-3.0
2" PVC PIPE, 2 MM SLOTTED
FINE SAND/MIDDLE SAND d50=200-250 µM, U=1.5-2.0
MIDDLE SAND d50=500 µM, U=1.5-3.0
COARSE SAND d50=2000 µM, U=1.5-3.0
GRAVEL d50=8 µM, U=1.5-3.0
4" PVC PIPE, 2 MM SLOTTED
3" DRAIN PIPE, 2MM SLOTTED
SUPPORTING BRICK STONES
300
1200
200
600
100
100
250
1250
TOP SECTION
MAN HOLE
4" PVC PIPE, 2 MM SLOTTED
SUPPORTING BRICK STONES
3" DRAIN PIPE, 2 MM SLOTTED
CLIENT: RURAL DEVELOPMENT DEPARTMENT TAMIL NADU
PROJECT: "Renovation of Traditional Village Ponds"
TITLE: Technical Drawings for Edaiyur (Kancheepuram District)
NO
DATE June 2006
Upflow Slow Sand Filter
UNIT : SI
SCALE : UNSCALED
CENTRE FOR ENVIRONMENTAL STUDIES; ANNA UNIVERSITY
SARDAR PATEL ROAD; GUINDY - CHENNAI 600025, INDIA
TEL: +91-44-22353092 FAX: +91-44 22354717

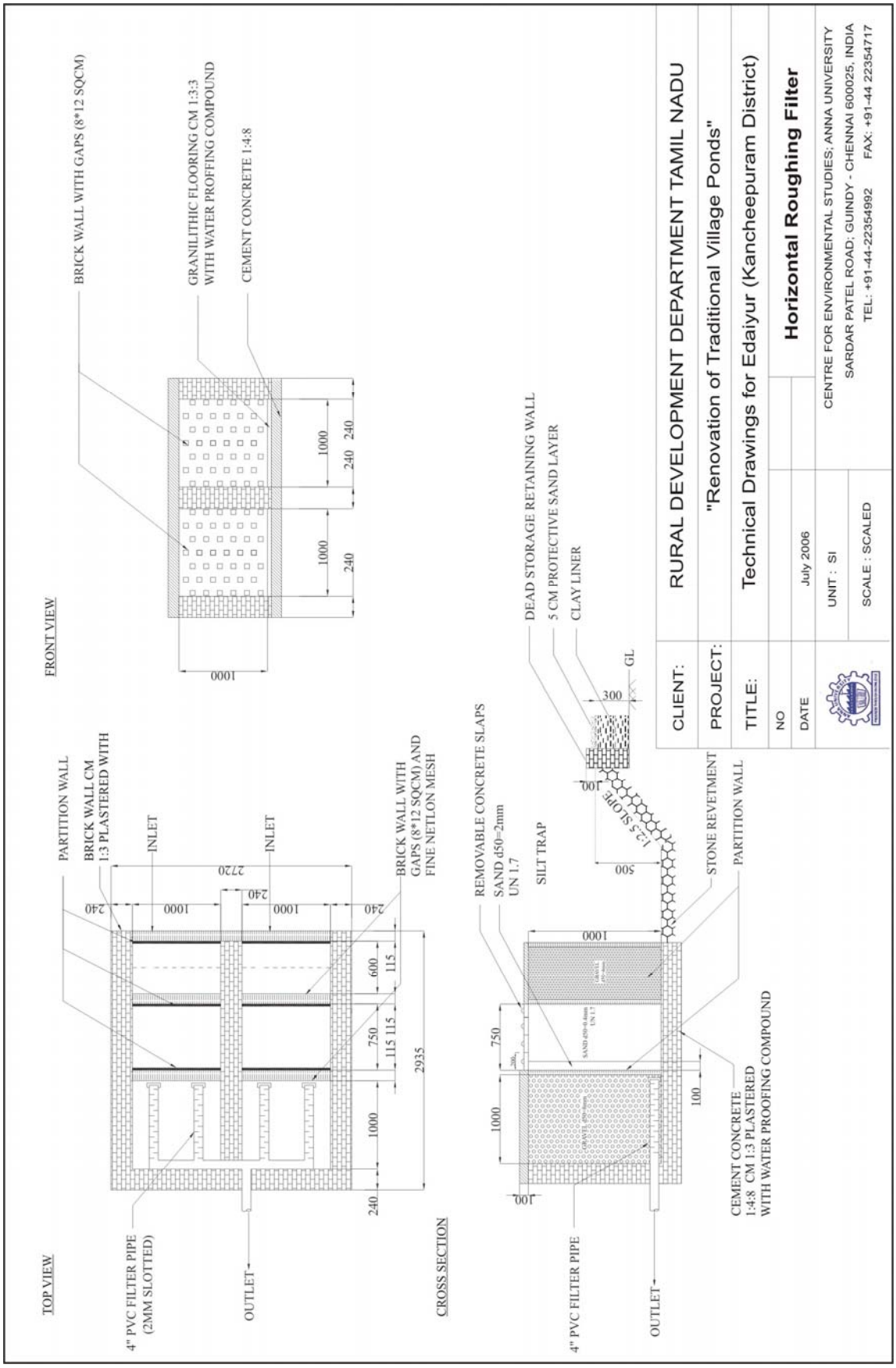
FRONT VIEW
BRICK WALL WITH GAPS (8*12 SQCM)
GRANILITHIC FLOORING CM 1:3:3
WITH WATER PROFFING COMPOUND
CEMENT CONCRETE 1:4:8
1000
1000
240
240
1000
TOP VIEW
PARTITION WALL
BRICK WALL CM
1:3 PLASTERED WITH
INLET
INLET
2720
240
1000
1000
240
BRICK WALL WITH
GAPS (8*12 SQCM) AND
FINE NETLON MESH
600
115
750
115 115
1000
240
2935
4" PVC FILTER PIPE
(2MM SLOTTED)
OUTLET
CROSS SECTION
REMOVABLE CONCRETE SLAPS
SAND d50=2mm
UN 1.7
SILT TRAP
DEAD STORAGE RETAINING WALL
5 CM PROTECTIVE SAND LAYER
CLAY LINER
GL
300
100
1:2.5 SLOPE
500
STONE REVETMENT
PARTITION WALL
1000
750
1000
100
100
4" PVC FILTER PIPE
OUTLET
CEMENT CONCRETE
1:4.8 CM 1:3 PLASTERED
WITH WATER PROOFING COMPOUND
CLIENT: RURAL DEVELOPMENT DEPARTMENT TAMIL NADU
PROJECT: "Renovation of Traditional Village Ponds"
TITLE: Technical Drawings for Edaiyur (Kancheepuram District)
NO
DATE July 2006
UNIT : SI
SCALE : SCALED
Horizontal Roughing Filter
CENTRE FOR ENVIRONMENTAL STUDIES; ANNA UNIVERSITY
SARDAR PATEL ROAD; GUINDY - CHENNAI 600025, INDIA
TEL: +91-44-22354992 FAX: +91-44 22354717

ESTIMATE Input for blue cells required

Volume of the existing pond - calculation

Data Input

Volume of the existing pond	1500	m^3

Details for pipe connention between RSF and pump well

Distance between RSF and toe wall (inner boundary of bund)	20	m
Distance between compound wall and pump well	200	m

Table 1: Comparison - costs.

Sub - Total	circular in lakh Rs	rectangular in lakh Rs
Deepening	1.56	2.11
Bottom	0.25	0.32
Revetment	2.16	2.74
Compound Wall	0.81	1.02
RSF	0.13	0.13
Inlet	0.04	0.04
Pump well and filter	0.95	0.94
SUB TOTAL	5.90	7.31
Constingencies (5 %)	0.30	0.37
Additions	0.00	0.00
GRAND TOTAL	6.20	7.68

DETAILED ESTIMATE - circular design of the storage tank

No.	Sub No.	Description	detailled description	Nos	L	B	D/H	Quantity	Unit	Rate in Rs	Amount in Rs	Sub Total in Rs	
1		**Deepening of the pond**	***excavation - earteworks***	**Nos**	**L**	**B**	**D/H**						
1.1		Volume of the storage tank	less the volume of the existing tank	1	-	-	-	4302.13	m³	**25.00**	107553.22		
1.2		Additional excavation	to lower the tank 15 cm as shown in the design	1	-	-	-	262.74	m³	**25.00**	6568.53		
1.3		Additional excavation	excavation for 30 cm clay liner (+ 5 cm Sand)	1	706.86		0.35	247.40	m³	**25.00**	6185.01		
1.4		Additional excavation	excavation for the Revetment (30 cm)	1	1209.29		0.30	362.79	m³	**25.00**	9069.67		
1.5		Additional excavation	for the area between the revetment and the base for the wall	1	59.56		0.15	8.93	m³	**25.00**	223.37		
1.6		Additional excavation	excavation for the base of the wall round the rank	1	151.61	0.50	0.20	15.16	m³	**25.00**	379.03		
		Sub - Excavation	***Effective water storage volume + provisions for clay liner and revetment work***					***5175.06***	***m³***		***Sub Excavation***	***129978.84***	***Rs***
1.5		conveyance charges for removed earth						5175.06	m³	**5.00**	25875.29		
		Total - Deepening of the pond	***including earthworks and conveyance charges for removed earth***								***Sub Total - Deepening***	***155854.12***	***Rs***
2		**Bottom of the storage tank**	**30 cm clay liner, covered by a 5 cm sand layer**	**Nos**	**L/dia**	**B**	**H**						
2.1		Clay for the lining	clay for the 30 cm thick lining including costs for collection and supply	1	30.00	-	0.30	212.06	m³	**65.00**	13783.74		
2.2		Sand (Riversand)	for the 5 cm thick layer over the clay lining	1	30.00	-	0.05	35.34	m³	**130.00**	4594.58		
2.3		Consolidation	clay liner and sand layer	1	30.00	-		706.86	m²	**2.00**	1413.72		
2.4		foot wall	wall made of rough stones round the bottom area dimensions: 30 cm x 40 cm length of the foot wall in m = 94.2 including costs for material an labour chrages	1	-	0.30	0.40	11.31	m³	**500.00**	5654.87		
		Total - Bottom of the storage tank	***including collection, supply and consolidation for caly and sand***								***Sub Total - Bottom***	***25446.90***	***Rs***
3		**Revetment work**	**containing the 1st and 2nd revetment and the berm between (additional the area between storage tank and wall)**										
				Nos	**L**	**B**	**D/H**						
3.1		Rough stone dry packing (Area of Revetments and Berm)	including costs for conveyance of all materials and labour charges (30 cm)	1	1209		0.3	362.79	m³	**400.00**	145114.72		
3.2		Rough stone dry packing (Area between storage tank and wall)	including costs for conveyance of all materials and labour charges (15 cm , horizontal)	1	59.56		0.15	8.93	m³	**400.00**	3573.88		
3.2		Pointing on side Revetment, Berm and area between tank and wall (see 3.2)	with waterproof cement mortar, including costs for conveyance of all materials and labour charges	1	1268.85		-	1268.85	m²	**50.00**	63442.70		
3.3	3.3.1	Steps inside the Oorani	each step 1,50 m x 0,30 m x 0,23 m	12	1.50	0.30	0.23	1.24	m³	**1100.00**	1368.31		
	3.3.2	Wall on both sides of the steps 1:5 waterproofed cement motar mix	wall, for both sides of the steps height = 45 cm width = 23 cm	2	10.01	0.23	0.45	2.07	m³	**1100.00**	2280.16		
		Total - Revetment work	***including all revetments, berm and the area between the 2nd revetment and the wall***								***Sub Total - Revetment***	***215779.76***	***Rs***

4		Compund wall	wall around the storage tank	Nos	L	B	D/H						
4.1	4.1.1	Wall	Brickwork, including costs for conveyance of all materials and labour charges	1	149.61	0.25	1	37.40	m³	1500.00		56104.97	
	4.1.2			1	149.61	0.25	0.1	3.74					
4.2		Base for the wall	Rough stones and cement concrete, including costs for conveyance of all materials and labour charges	1	151.61	0.50	0.20	15.16	m³	1300.00		19709.72	
4.3		Gate, width = 2 m	construction of the gate, 2 m including all costs	1	2.00	-	-	1.00	-	5000.00		5000.00	
		Total - Compound wall	*including base for the wall and a gate (width = 2 m)*								*Sub Total - Wall*	*80814.70*	*Rs*

5		Roughing Sand Filter (RSF)	sand filter, placed in the storage tank	Nos	L	B	D/H	Quantity	Unit	Rate		
5.1		Earthwork excavation		1	3.36	2.70	0.37	3.31	m³	25.00	82.78	
5.2	5.2.1	PCC 1:5:10, waterproofed cement		1	2.85	2.70	0.15	1.15	m³	1100.00	1269.68	
	5.2.2			1	0.75	0.55	0.10	0.04	m³	1100.00	45.38	
5.3	5.3.1	Brickwork in waterproofed cement		3	2.85	0.23	1.62	3.19	m³	1410.00	4491.88	
	5.3.2	mortar mix 1:5 using chamber bricks		1	2.23	0.23	1.62	0.83	m³	1410.00	1171.57	
	5.3.3			2	0.30	0.23	0.30	0.04	m³	1410.00	58.37	
	5.3.4			1	0.76	0.23	0.30	0.05	m³	1410.00	73.94	
	5.3.5			1	2.85	2.70	0.23	1.77	m³	1410.00	2495.49	
	5.3.6			1	0.75	0.55	0.23	0.09	m³	1410.00	133.77	
5.4	5.4.1	Plastering 1:5 12 mm thick with		2	2.85	1.75	-	9.98	m²	45.00	448.88	
	5.4.2	waterproofed cement		4	2.60	1.75	-	18.20	m²	45.00	819.00	
	5.4.3			1	2.70	1.75	-	4.73	m²	45.00	212.63	
	5.4.4			2	1.00	1.75	-	3.50	m²	45.00	157.50	
5.5	5.5.1	Gravel, (including conveyance costs		2	1.00	1.00	1.50	3.00	m³	310.00	930.00	
	5.5.2	and all labour charges)		2	1.00	0.60	1.50	1.80	m³	310.00	558.00	
5.6		Sand (including conveyanve costs and all labour charges)		2	1.00	1.00	1.50	3.00	m³	130.00	390.00	
		Total - RSF									*Sub Total - RSF*	*13338.85*	*Rs*

6		Inlet	Grit Chamber and setling basin at inlet	Nos	L	B	D/H	Quantity	Unit	Rate		
6.1	6.1.1	PCC 1:5:10, waterproofed cement	inlet platform	1	0.20	1.50	0.15	0.05	m³	1100.00	49.50	
	6.1.2		inlet slope	1	1.12	1.50	0.15	0.25	m³	1100.00	277.20	
	6.1.3		base platform	1	4.00	1.50	0.15	0.90	m³	1100.00	990.00	
	6.1.4		side wall (two times)	2	0.80	5.00	0.15	1.20	m³	1100.00	1320.00	
6.2		Brick work in waterproofed cement mortar mix 1:5 using chamber bricks	flow overweir	1	0.50	1.50	0.23	0.17	m³	1410.00	243.23	
6.3	6.3.1	Plastering 1:5 12 mm thick with	inlet platform	1	0.20	1.50	-	0.30	m³	45.00	13.50	
	6.3.2	waterproofed cement	inlet slope	1	1.12	1.50	-	1.68	m³	45.00	75.60	
	6.3.3		base platform	1	4.00	1.50	-	6.00	m³	45.00	270.00	
	6.3.4		side wall (two times)	2	0.80	5.00	-	8.00	m³	45.00	360.00	
	6.3.5		overflow weir (two times)	2	0.50	1.50	-	1.50	m³	45.00	67.50	
	6.3.6		overflow weir	1	0.23	1.50	-	0.35	m³	45.00	15.53	
6.4		baffle wall, 3 cm thick	waterproofed cement	1	0.40	1.80	-	0.72	m²	1000.00	720.00	
		Total - Inlet									*Sub Total - Inlet*	*4402.05*	*Rs*

7		Pump well and fine sand filter		Nos	L	B	D/H	Quantity	Unit	Rate	
7.1	7.1.1	Earthwork excarvation for the well	first depth 0 m to 2 m	1	2.00	-	1.80	5.09	m^3	25.00	127.23
	7.1.2	diameter = 1.8 m	second depth 2 m to 4 m	1	2.00	-	1.80	5.09	m^3	50.00	254.47
	7.1.3		third depth 4 m to 6 m	1	2.00	-	1.80	5.09	m^3	100.00	508.94
	7.1.4	depth of well (in m) = 8.5	fourth depth 6 m to 7 m	1	1.00	-	1.80	2.54	m^3	100.00	254.47
	7.1.5		fifth depth 7 to 7.5 m	1	0.50	-	1.80	1.27	m^3	200.00	254.47
	7.1.6		sixth depth 7.5 m to 8 m	1	0.50	-	1.80	1.27	m^3	200.00	254.47
	7.1.7		seventh depth 8 m to 8.5 m	1	0.50	-	1.80	1.27	m^3	300.00	381.70
	7.1.8		eighth depth 8.5 m to 9 m	0	0.50	-	1.80	0.00	m^3	300.00	0.00
7.2		Cost and supply of concrete rings of 1.8 m dia height of the rings = 45 cm (including all costs)		23	-	-	0.45	23	piece	990.00	23100.00
7.3	7.3.1	Cap for the pump well	Cap for the pump well with man hole made of concrete height = 10 cm	1	0.10	-	1.80	0.25	m^3	1100.00	279.92
	7.3.2		Cap for the man hole, made of steel (including all costs)					1	piece	1000.00	0.00
7.4	7.4.1	Infiltration gravel bed for the pump well	Earthwork excarvation	1	1.00	2.00	0.30	0.60	m^3	25.00	1000.00
	7.4.2		Filling with graded graval (including all costs)	1	1.00	2.00	0.30	0.60	m^3	310.00	15.00
7.5		Base platform	For sandfilter and pumpwell PCC , waterproofed cement Dimensions: 4.5 m x 2.5 x 0.3 m	1	4.50	2.50	0.30	3.38	m^3	1100.00	186.00
7.6		Steps	Steps leading to water pumps 4 steps, height = 15 cm, length = 2 m bredth = 25 cm made in PCC, including all costs	4	2.00	0.25	0.15	0.30	m^3	1100.00	3712.50
7.7	7.7.1	Fine Sand Filter **calculation for two filter units**	Body for the filter, made in brickwork inner diameter = 1.2 m height = 1.3 m outher diameter = 1.35 m wall thickness = 7 cm	-	-	-	-	0.89	m^3	1500.00	330.00
	7.7.2		Cover for the top of the filter, made in concrete covering half the top of the filter, height = 5 cm	-	-	-	-	0.07	m^3	1100.00	1332.65
	7.7.3		Plastering 1:5 12 mm thick with waterproofed cement	-	-	-	-	25.65	m^2	45.00	78.73
	7.7.4		FINE SAND d_{50} = 200 µm (including conveyanve costs and all labour charges)	2	0.60	-	1.20	1.36	m^3	150.00	1154.39
	7.7.5		COARSE SAND d_{50} = - 1000 µm (including conveyanve costs and all labour charges)	2	0.20	-	1.20	0.45	m^3	120.00	203.58
	7.7.6		GRAVEL d = 4 mm (including conveyanve costs and all labour charges)	2	0.30	-	1.20	0.68	m^3	300.00	54.29
	7.7.7		PVC pipes set, 6"/2" 1 mm slotted in graval layer	2	-	-	-	2	piece	500.00	203.58
	7.7.8		Cover for the sand filter, gritt made of steel dia = 1.2 m covering half the top of the filter	2	-	-	1.20	2	piece	1500.00	1000.00
	7.8.9		Ball valves	4	-	-	-	4	piece	190.00	3000.00
7.8	7.8.1	Hand pumps	Mark II water pump	2	-	-	-	2	piece	12000.00	760.00
	7.8.2		PVC pipe set between pumps and filter	2	-	-	-	2	piece	25.00	24000.00
	7.8.3		water meter	2	-	-	-	2	piece	2194.00	50.00
	7.8.4		water meter cover	2	-	-	-	2	piece	400.00	4388.00
	7.8.5		additional sealing for Mark II pump	2	-	-	-	2	-	50.00	800.00
7.9	7.9.1	Pipe connection between RSF and pump wa	Earthwork fcm RSF base till inner boundary of bund	1	20.00	0.30	0.30	1.80	m^3	25.00	100.00
	7.9.2		4" PVC pipe fom RSF base till inner boundary of bund	1	20.00	-	-	20.00	m	50.00	45.00
	7.9.3		Breach across the bund - earthwork	1	9.40	0.30	0.30	0.85	m^3	25.00	1000.00
	7.9.4		4" PVC pipe across the bund	1	9.40	-	-	9.4	m	50.00	21.15
	7.9.5		Earthwork from outer boundary of bund till pump well	1	200.00	0.30	0.30	18.00	m^3	25.00	470.00
	7.9.6		4" PVC pipe from outer boundary of bund till pump well	1	200.00	-	-	200.00	m	50.00	450.00
7.10	7.10.1	Tiles	Tiles for pump well dia = 1.8 m	1	1.50	-	1.80	11.03	m^3	442.00	10000.00
	7.10.2		Tiles for sand filter dia = 1.35 m	2	1.30	-	1.35	12.46	m^3	442.00	4873.93
	7.10.3		Tiles for base platform 4.5 m x 2.5 m x 0.3 m	1	4.50	2.50	0.30	10.04	m^3	442.00	5506.60
		Total - Pump well and fine sand filter								*Sub Total - Pump well / filter*	4438.80 *94589.85* Rs
		SUB TOTAL								**SUB TOTAL**	590226.24 Rs

	Contingencies	Contingencies and unforseen items (5 % of the SUB TOTAL) less the costs for additions				Contingencies	29511.31	Rs
8	Additions	optional items						
8.1	Weather station	including all costs and labour charges	0	-	100000.00	0.00		
8.2	Solar lamp	including all costs and labour charges	1	-		0.00		
8.3	8.3.1 Beautification	planting trees, including all costs	10	-	25.00	250.00		
	8.3.2	addtional items	0		0.00	0.00		
	Total - Additions					Sub Total - Additioins	250.00	Rs
	GRAND TOTAL					GRAND TOTAL	619987.55	Rs

DETAILED ESTIMATE - rectangular design of the storage tank

No.	Sub No.	Description	detailled description	Nos	L	B	D/H	Quantity	Unit	Rate in Rs	Amount in Rs	Sub Total in Rs	
1		**Deepening of the pond**	***excavation - earteworks***	**Nos**	**L**	**B**	**D/H**						
1.1		Volume of the storage tank	less the volume of the existing tank	1	-	-	-	5887.50	m³	**25.00**	147187.50		
1.2		Additional excavation	to lower the tank 15 cm as shown in the design	1	-	-	-	334.53	m³	**25.00**	8363.32		
1.3		Additional excavation	excavation for 30 cm clay liner (+ 5 cm Sand)	1	900.00		0.35	315.00	m³	**25.00**	7875.00		
1.4		Additional excavation	excavation for the Revetment (30 cm)	1	1539.72		0.30	461.91	m³	**25.00**	11547.86		
1.5		Additional excavation	for the area between the revetment and the base for the wall	1	75.84		0.15	11.38	m³	**25.00**	284.40		
1.6		Additional excavation	excavation for the base of the wall round the rank	1	193.04	0.50	0.20	19.30	m³	**25.00**	482.60		
		Sub - Excavation	***Effective water storage volume + provisions for clay liner and revetment work***					***6998.95***	***m³***		***Sub Excavation***	***175740.68***	***Rs***
1.5		conveyance charges for removed earth						6998.95	m³	**5.00**	34994.74		
		Total - Deepening of the pond	***including earthworks and conveyance charges for removed earth***								***Sub Total - Deepening***	***210735.41***	***Rs***
2		**Bottom of the storage tank**	**30 cm clay liner, covered by a 5 cm sand layer**	**Nos**	**L**	**B**	**H**						
2.1		Clay for the lining	clay for the 30 cm thick lining including costs for collection and supply	1	30.00	30.00	0.30	270.00	m³	**65.00**	17550.00		
2.2		Sand (Riversand)	for the 5 cm thick layer over the clay lining	1	30.00	30.00	0.05	45.00	m³	**130.00**	5850.00		
2.3		Consolidation	clay liner and sand layer	1	30.00	30.00	-	900.00	m²	**2.00**	1800.00		
2.4		foot wall	wall made of rough stones round the bottom area dimensions: 30 cm x 40 cm length of the foot wall in m = 120.0 including costs for material an labour chrages	1	-	0.30	0.40	14.40	m³	**500.00**	7200.00		
		Total - Bottom of the storage tank	***including collection, supply and consolidation for caly and sand***								***Sub Total - Bottom***	***32400.00***	***Rs***
3		**Revetment work**	**containing the 1st and 2nd revetment and the berm between (additional the area between storage tank and wall)**										
				Nos	**L**	**B**	**D/H**						
3.1		Rough stone dry packing (Area of Revetments and Berm)	including costs for conveyance of all materials and labour charges (30 cm)	1	1539.72		0.30	461.91	m³	**400.00**	184765.80		
3.2		Rough stone dry packing (Area between storage tank and wall)	including costs for conveyance of all materials and labour charges (15 cm , horizontal)	1	75.84		0.15	11.38	m³	**400.00**	4550.40		
3.2		Pointing on side Revetment, Berm and area between tank and wall (see 3.2)	with waterproof cement mortar, including costs for conveyance of all materials and labour charges	1	1615.56		-	1615.56	m²	**50.00**	80777.75		
3.3	3.3.1	Steps inside the Oorani	each step 1,50 m x 0,30 m x 0,23 m	12	1.50	0.30	0.23	1.24	m³	**1100.00**	1368.31		
	3.3.2	Wall on both sides of the steps 1:5 waterproofed cement motar mix	wall, for both sides of the steps height = 45 cm width = 23 cm	2	10.01	0.23	0.45	2.07	m³	**1100.00**	2280.16		
		Total - Revetment work	***including all revetments, berm and the area between the 2nd revetment and the wall***								***Sub Total - Revetment***	***273742.42***	***Rs***

4		**Compund wall**	**wall around the storage tank**	**Nos**	**L**	**B**	**D/H**					
4.1	4.1.1	Wall	Brickwork, including costs for conveyance of	1	191.04	0.25	1.00	47.76	m³	**1500.00**	71640.00	
	4.1.2		all materials and labour charges	1	191.04	0.25	0.10	4.78				
4.2		Base for the wall	Rough stones and cement concrete, including costs for conveyance of all materials and labour charges	1	193.04	0.50	0.20	19.30	m³	**1300.00**	25095.20	
4.3		Gate, width = 2 m	construction of the gate,2 m including all costs	1	2.00	-	-	1.00	-	**5000.00**	5000.00	
		Total - Compound wall	***including base for the wall and a gate (width = 2 m)***								***Sub Total - Wall***	***101735.20***	***Rs***
5		**Roughing Sand Filter (RSF)**	**sand filter, placed in the storage tank**	**Nos**	**L**	**B**	**D/H**					
5.1		Earthwork excavation		1	3.36	2.70	0.37	3.31	m³	**25.00**	82.78	
5.2	5.2.1	PCC 1:5:10, waterproofed cement		1	2.85	2.70	0.15	1.15	m³	**1100.00**	1269.68	
	5.2.2			1	0.75	0.55	0.10	0.04	m³	**1100.00**	45.38	
5.3	5.3.1	Brick work in waterproofed cement		3	2.85	0.23	1.62	3.19	m³	**1410.00**	4491.88	
	5.3.2	mortar mix 1:5 using chamber bricks		1	2.23	0.23	1.62	0.83	m³	**1410.00**	1171.57	
	5.3.3			2	0.30	0.23	0.30	0.04	m³	**1410.00**	58.37	
	5.3.4			1	0.76	0.23	0.30	0.05	m³	**1410.00**	73.94	
	5.3.5			1	2.85	2.70	0.23	1.77	m³	**1410.00**	2495.49	
	5.3.6			1	0.75	0.55	0.23	0.09	m³	**1410.00**	133.77	
5.4	5.4.1	Plastering 1:5 12 mm thick with		2	2.85	1.75	-	9.98	m²	**45.00**	448.88	
	5.4.2	waterproofed cement		4	2.60	1.75	-	18.20	m²	**45.00**	819.00	
	5.4.3			1	2.70	1.75	-	4.73	m²	**45.00**	212.63	
	5.4.4			2	1.00	1.75	-	3.50	m²	**45.00**	157.50	
5.5	5.5.1	Gravel, (including conveyance costs		2	1.00	1.00	1.50	3.00	m³	**310.00**	930.00	
	5.5.2	and all labour charges)		2	1.00	0.60	1.50	1.80	m³	**310.00**	558.00	
5.6		Sand (including conveyanve costs and all labour charges)		2	1.00	1.00	1.50	3.00	m³	**130.00**	390.00	
		Total - RSF									***Sub Total - RSF***	***13338.85***	***Rs***
6		**Inlet**	**Grit Chamber and setling basin at inlet**	**Nos**	**L**	**B**	**D/H**					
6.1	6.1.1	PCC 1:5:10, waterproofed cement	inlet platform	1	0.20	1.50	0.15	0.05	m³	**1100.00**	49.50	
	6.1.2		inlet slope	1	1.12	1.50	0.15	0.25	m³	**1100.00**	277.20	
	6.1.3		base platform	1	4.00	1.50	0.15	0.90	m³	**1100.00**	990.00	
	6.1.4		side wall (two times)	2	0.80	5.00	0.15	1.20	m³	**1100.00**	1320.00	
6.2		Brick work in waterproofed cement mortar mix 1:5 using chamber bricks	flow overweir	1	0.50	1.50	0.23	0.17	m³	**1410.00**	243.23	
6.3	6.3.1	Plastering 1:5 12 mm thick with	inlet platform	1	0.20	1.50	-	0.30	m²	**45.00**	13.50	
	6.3.2	waterproofed cement	inlet slope	1	1.12	1.50	-	1.68	m²	**45.00**	75.60	
	6.3.3		base platform	1	4.00	1.50	-	6.00	m²	**45.00**	270.00	
	6.3.4		side wall (two times)	2	0.80	5.00	-	8.00	m²	**45.00**	360.00	
	6.3.5		overflow weir (two times)	2	0.50	1.50	-	1.50	m²	**45.00**	67.50	
	6.3.6		overflow weir	1	0.23	1.50	-	0.35	m²	**45.00**	15.53	
6.4		baffle wall, 3 cm thick	waterproofed cement	1	0.40	1.80	-	0.72	m²	**1000.00**	720.00	
		Total - Inlet									***Sub Total - Inlet***	***4402.05***	***Rs***

7		pump well and fine sand filter		Nos	L	B	D/H				
7.1	7.1.1	Earthwork excarvation for the well	first depth 0 m to 2 m	1	2.00	-	1.80	5.09	m^3	**25.00**	127.23
	7.1.2	diameter = 1.8 m	second depth 2 m to 4 m	1	2.00	-	1.80	5.09	m^3	**50.00**	254.47
	7.1.3		third depth 4 m to 6 m	1	2.00	-	1.80	5.09	m^3	**100.00**	508.94
	7.1.4	depth of well (in m) = 8.5	fourth depth 6 m to 7 m	1	1.00	-	1.80	2.54	m^3	**100.00**	254.47
	7.1.5		fifth depth 7 to 7.5 m	1	0.50	-	1.80	1.27	m^3	**200.00**	254.47
	7.1.6		sixth depth 7.5 m to 8 m	1	0.50	-	1.80	1.27	m^3	**200.00**	254.47
	7.1.7		seventh depth 8 m to 8.5 m	1	0.50	-	1.80	1.27	m^3	**300.00**	381.70
	7.1.8		eighth depth 8.5 m to 9 m	0	0.50	-	1.80	0.00	m^3	**300.00**	0.00
7.2		Cost and supply of concrete rings of 1.8 m dia height of the rings = 45 cm (including all costs)		23	-	-	0.45	23	piece	**990.00**	23100.00
7.3	7.3.1	Cap for the pump well	Cap for the pump well with man hole made of concrete height = 10 cm	1	0.10	-	1.80	0.25	m^3	**1100.00**	279.92
	7.3.2		Cap for the man hole, made of steel (including all costs)					1	piece	**1000.00**	1000.00
7.4	7.4.1	Infiltration gravel bed for the pump well	Earthwork excarvation	1	1.00	2.00	0.30	0.60	m^3	**25.00**	15.00
	7.4.2		Filling with graded graval (including all costs)	1	1.00	2.00	0.30	0.60	m^3	**310.00**	186.00
7.5		Base platform	For sandfilter and pumpwell PCC , waterproofed cement Dimensions: 4.5 m x 2.5 x 0.3 m	1	4.50	2.50	0.30	3.38	m^3	**1100.00**	3712.50
7.6		Steps	Steps leading to water pumps 4 steps, height = 15 cm, length = 2 m bredth = 25 cm made in PCC, including all costs	4	2.00	0.25	0.15	0.30	m^3	**1100.00**	330.00
7.7	7.7.1	Fine Sand Filter **calculation for two filter units**	Body for the filter, made in brickwork inner diameter = 1.2 m height = 1.3 m outher diameter = 1.35 m wall thickness = 7 cm	-	-	-	-	0.89	m^3	**1500.00**	1332.65
	7.7.2		Cover for the top of the filter, made in concrete covering half the top of the filter, height = 5 cm	-	-	-	-	0.07	m^3	**1100.00**	78.73
	7.7.3		Plastering 1:5 12 mm thick with waterproofed cement	-	-	-	-	25.65	m^2	**45.00**	1154.39
	7.7.4		FINE SAND d_{60} = 200 µm (including conveyarve costs and all labour charges)	2	0.60	-	1.20	1.36	m^3	**150.00**	203.58
	7.7.5		COARSE SAND d_{60} = - 1000 µm (including conveyarve costs and all labour charges)	2	0.20	-	1.20	0.45	m^3	**100.00**	45.24
	7.7.6		GRAVEL d = 4 mm (including conveyarve costs and all labour charges)	2	0.30	-	1.20	0.68	m^3	**50.00**	33.93
	7.7.7		PVC pipes set, 6"/2" 1 mm slotted in graval layer	2	-	-	-	2	piece	**500.00**	1000.00
	7.7.8		Cover for the sand filter, gritt made of steel dia = 1.2 m covering half the top of the filter	2	-	-	1.20	2	piece	**1500.00**	3000.00
	7.8.9		Ball valves	4	-	-	-	4	piece	**190.00**	760.00
7.8	7.8.1	Hand pumps	Mark II water pump	2	-	-	-	2	piece	**12000.00**	24000.00
	7.8.2		PVC pipe set between pumps and filter	2	-	-	-	2	piece	**25.00**	50.00
	7.8.3		water meter	2	-	-	-	2	piece	**2194.00**	4388.00
	7.8.4		water meter cover	2	-	-	-	2	piece	**400.00**	800.00
	7.8.5		additional sealing for Mark II pump	2	-	-	-	2	-	**50.00**	100.00
7.9	7.9.1	Pipe connection between RSF and pump well	Earthwork fom RSF base till inner boundary of bund	1	20.00	0.30	0.30	1.80	m^3	**25.00**	45.00
	7.9.2		4" PVC pipe fom RSF base till inner boundary of bund	1	20.00	-	-	20.00	m	**50.00**	1000.00
	7.9.3		Breach across the bund - earthwork	1	9.40	0.30	0.30	0.85	m^3	**25.00**	21.15
	7.9.4		4" PVC pipe across the bund	1	9.40	-	-	9.40	m	**50.00**	470.00
	7.9.5		Earthwork from outer boundary of bund till pump well	1	200.00	0.30	0.30	18.00	m^3	**25.00**	450.00
	7.9.6		4" PVC pipe from outer boundary of bund till pump well	1	200.00	-	-	200.00	m	**50.00**	10000.00
7.10	7.10.1	Tiles	Tiles for pump well dia = 1.8 m	1	1.50	-	1.80	11.03	m^3	**442.00**	4873.93
	7.10.2		Tiles for sand filter dia = 1.35 m	2	1.30	-	1.35	12.46	m^3	**442.00**	5506.60
	7.10.3		Tiles for base platform 4.5 m x 2.5 m x 0.3 m	1	4.50	2.50	0.30	10.04	m^3	**442.00**	4438.80
		Total - Pump well and fine sand filter								*Sub Total - Pump well / filter*	**94411.16** Rs
		SUB TOTAL								**SUB TOTAL**	730765.10 Rs

		Contingencies	*Contingencies and unforseen items (5 % of the SUB TOTAL)*				*Contingencies*	*36538.25*	*Rs*
8		**Additions**	**optional items**						
8.1		Weather station	including all costs and labour charges	0	-	**100000.00**	0.00	-	
8.2		Solar lamp	including all costs and labour charges	1	-		0.00	-	
8.3	8.3.1	Beautification	planting trees, including all costs	10	-	**25.00**	250.00	-	
	8.3.2		additional items	0		**0.00**	0.00	-	
		Total - Additions					*Sub Total - Additioins*	*250.00*	*Rs*
		GRAND TOTAL					**GRAND TOTAL**	767553.35	Rs